6

Electrical indicating and test instruments

The magnitude of voltage signals can be measured by various electrical indicating and test instruments, such as meters (both analogue and digital), the cathode ray oscilloscope and the digital storage oscilloscope. As well as signal-level voltages, many of these instruments can also measure higher-magnitude voltages, and this is indicated where appropriate.

6.1 Digital meters

All types of digital meter are basically modified forms of the *digital voltmeter* (DVM), irrespective of the quantity that they are designed to measure. Digital meters designed to measure quantities other than voltage are in fact digital voltmeters that contain appropriate electrical circuits to convert current or resistance measurement signals into voltage signals. *Digital multimeters* are also essentially digital voltmeters that contain several conversion circuits, thus allowing the measurement of voltage, current and resistance within one instrument.

Digital meters have been developed to satisfy a need for higher measurement accuracies and a faster speed of response to voltage changes than can be achieved with analogue instruments. They are technically superior to analogue meters in almost every respect. However, they have a greater cost due to the higher manufacturing costs compared with analogue meters. The binary nature of the output reading from a digital instrument can be readily applied to a display that is in the form of discrete numerals. Where human operators are required to measure and record signal voltage levels, this form of output makes an important contribution to measurement reliability and accuracy, since the problem of analogue meter parallax error is eliminated and the possibility of gross error through misreading the meter output is greatly reduced. The availability in many instruments of a direct output in digital form is also very useful in the rapidly expanding range of computer control applications. Quoted inaccuracy figures are between $\pm 0.005\%$ (measuring d.c. voltages) and $\pm 2\%$. Additional advantages of digital meters are their very high input impedance ($10\,\mathrm{M\Omega}$ compared with $1-20\,\mathrm{k\Omega}$ for analogue meters), the ability to measure signals of frequency up to $1\,\mathrm{MHz}$ and the common inclusion of features such as automatic ranging, which prevents overload and reverse polarity connection etc.

The major part of a digital voltmeter is the circuitry that converts the analogue voltage being measured into a digital quantity. As the instrument only measures d.c. quantities in its basic mode, another necessary component within it is one that performs a.c.–d.c. conversion and thereby gives it the capacity to measure a.c. signals. After conversion, the voltage value is displayed by means of indicating tubes or a set of solid-state light-emitting diodes. Four-, five- or even six-figure output displays are commonly used, and although the instrument itself may not be inherently more accurate than some analogue types, this form of display enables measurements to be recorded with much greater accuracy than that obtainable by reading an analogue meter scale.

Digital voltmeters differ mainly in the technique used to effect the analogue-to-digital conversion between the measured analogue voltage and the output digital reading. As a general rule, the more expensive and complicated conversion methods achieve a faster conversion speed. Some common types of DVM are discussed below.

6.1.1 Voltage-to-time conversion digital voltmeter

This is the simplest form of DVM and is a ramp type of instrument. When an unknown voltage signal is applied to the input terminals of the instrument, a negative-slope ramp waveform is generated internally and compared with the input signal. When the two are equal, a pulse is generated that opens a gate, and at a later point in time a second pulse closes the gate when the negative ramp voltage reaches zero. The length of time between the gate opening and closing is monitored by an electronic counter, which produces a digital display according to the level of the input voltage signal. Its main drawbacks are non-linearities in the shape of the ramp waveform used and lack of noise rejection, and these problems lead to a typical inaccuracy of $\pm 0.05\%$. It is relatively cheap, however.

6.1.2 Potentiometric digital voltmeter

This uses a servo principle, in which the error between the unknown input voltage level and a reference voltage is applied to a servo-driven potentiometer that adjusts the reference voltage until it balances the unknown voltage. The output reading is produced by a mechanical drum-type digital display driven by the potentiometer. This is also a relatively cheap form of DVM that gives excellent performance for its price.

6.1.3 Dual-slope integration digital voltmeter

This is another relatively simple form of DVM that has better noise-rejection capabilities than many other types and gives correspondingly better measurement accuracy (inaccuracy as low as $\pm 0.005\%$). Unfortunately, it is quite expensive. The unknown voltage is applied to an integrator for a fixed time T_1, following which a reference voltage of opposite sign is applied to the integrator, which discharges down to a zero output in an interval T_2 measured by a counter. The output–time relationship for the integrator is shown in Figure 6.1, from which the unknown voltage V_i can be calculated

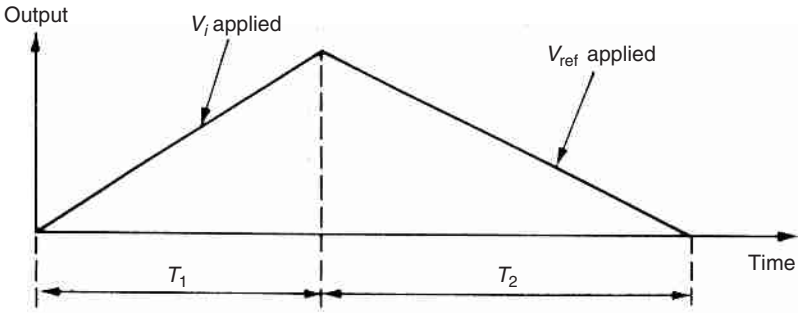

Fig. 6.1 Output–time relationship for integrator in a dual-slope digital voltmeter (DVM).

geometrically from the triangle as:

$$V_i = V_{\text{ref}}\,(T_1/T_2) \tag{6.1}$$

6.1.4 Voltage-to-frequency conversion digital voltmeter

In this instrument, the unknown voltage signal is fed via a range switch and an amplifier into a converter circuit whose output is in the form of a train of voltage pulses at a frequency proportional to the magnitude of the input signal. The main advantage of this type of DVM is its ability to reject a.c. noise.

6.1.5 Digital multimeter

This is an extension of the DVM. It can measure both a.c. and d.c. voltages over a number of ranges through inclusion within it of a set of switchable amplifiers and attenuators. It is widely used in circuit test applications as an alternative to the analogue multimeter, and includes protection circuits that prevent damage if high voltages are applied to the wrong range.

6.2 Analogue meters

Analogue meters are relatively simple and inexpensive and are often used instead of digital instruments, especially when cost is of particular concern. Whilst digital instruments have the advantage of greater accuracy and much higher input impedance, analogue instruments suffer less from noise and isolation problems. In addition, because analogue instruments are usually passive instruments that do not need a power supply, this is often very useful in measurement applications where a suitable mains power supply is not readily available. Many examples of analogue meter also remain in use for historical reasons.

Analogue meters are electromechanical devices that drive a pointer against a scale. They are prone to measurement errors from a number of sources that include inaccurate

6.3 Cathode ray oscilloscope

The cathode ray oscilloscope is probably the most versatile and useful instrument available for signal measurement. In its basic form, it is an analogue instrument and is often called an *analogue oscilloscope* to distinguish it from digital storage oscilloscopes which have emerged more recently (these are discussed in section 6.4). The analogue oscilloscope is widely used for voltage measurement, especially as an item of test equipment for circuit fault-finding, and it is able to measure a very wide range of both a.c. and d.c. voltage signals. Besides measuring voltage levels, it can also measure other quantities such as the frequency and phase of a signal. It can also indicate the nature and magnitude of noise that may be corrupting the measurement signal. The more expensive models can measure signals at frequencies up to 500 MHz and even the cheapest models can measure signals up to 20 MHz. One particularly strong merit of the oscilloscope is its high input impedance, typically 1 MΩ, which means that the instrument has a negligible loading effect in most measurement situations. As a test instrument, it is often required to measure voltages whose frequency and magnitude are totally unknown. The set of rotary switches that alter its timebase so easily, and the circuitry that protects it from damage when high voltages are applied to it on the wrong range, make it ideally suited for such applications. However, it is not a particularly accurate instrument and is best used where only an approximate measurement is required. In the best instruments, inaccuracy can be limited to ±1% of the reading but inaccuracy can approach ±10% in the cheapest instruments. Further disadvantages of oscilloscopes include their fragility (being built around a cathode ray tube) and their moderately high cost.

The most important aspects in the specification of an oscilloscope are its bandwidth, its rise time and its accuracy. The bandwidth is defined as the range of frequencies over which the oscilloscope amplifier gain is within 3 dB* of its peak value, as illustrated in Figure 6.11. The −3 dB point is where the gain is 0.707 times its maximum value.

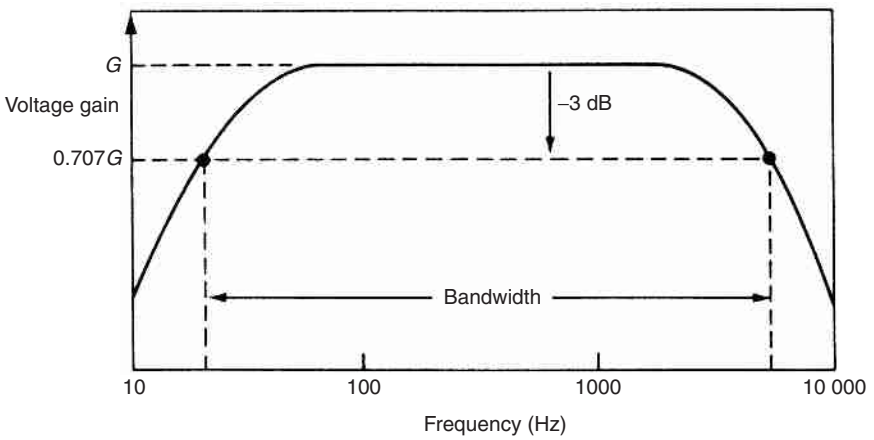

Fig. 6.11 Bandwidth.

* The decibel, commonly written dB, is used to express the ratio between two quantities. For two voltage levels V_1 and V_2, the difference between the two levels is expressed in decibels as $20\log_{10}(V_1/V_2)$. It follows from this that $20\log_{10}(0.7071) = -3\,\text{dB}$.

In most oscilloscopes, the amplifier is direct coupled, which means that it amplifies d.c. voltages by the same factor as low-frequency a.c. ones. For such instruments, the minimum frequency measurable is zero and the bandwidth can be interpreted as the maximum frequency where the sensitivity (deflection/volt) is within 3 dB of the peak value. In all measurement situations, the oscilloscope chosen for use must be such that the maximum frequency to be measured is well within the bandwidth. The -3 dB specification means that an oscilloscope with a specified inaccuracy of $\pm 2\%$ and bandwidth of 100 MHz will have an inaccuracy of $\pm 5\%$ when measuring 30 MHz signals, and this inaccuracy will increase still further at higher frequencies. Thus, when applied to signal-amplitude measurement, the oscilloscope is only usable at frequencies up to about 0.3 times its specified bandwidth.

The rise time is the transit time between the 10% and 90% levels of the response when a step input is applied to the oscilloscope. Oscilloscopes are normally designed such that:

$$\text{Bandwidth} \times \text{Rise time} = 0.35$$

Thus, for a bandwidth of 100 MHz, rise time $= 0.35/100\,000\,000 = 3.5$ ns.

An oscilloscope is a relatively complicated instrument that is constructed from a number of subsystems, and it is necessary to consider each of these in turn in order to understand how the complete instrument functions.

6.3.1 Cathode ray tube

The cathode ray tube, shown in Figure 6.12, is the fundamental part of an oscilloscope. The cathode consists of a barium and strontium oxide coated, thin, heated filament from which a stream of electrons is emitted. The stream of electrons is focused onto a well-defined spot on a fluorescent screen by an electrostatic focusing system that consists of a series of metal discs and cylinders charged at various potentials. Adjustment of this focusing mechanism is provided by controls on the front panel of an oscilloscope. An *intensity* control varies the cathode heater current and therefore the rate of emission of electrons, and thus adjusts the intensity of the display on the screen. These and other typical controls are shown in the illustration of the front panel of a simple oscilloscope given in Figure 6.13.

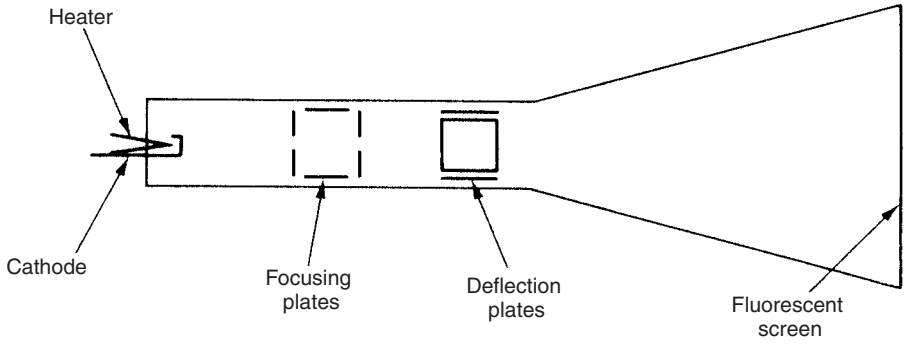

Fig. 6.12 Cathode ray tube.

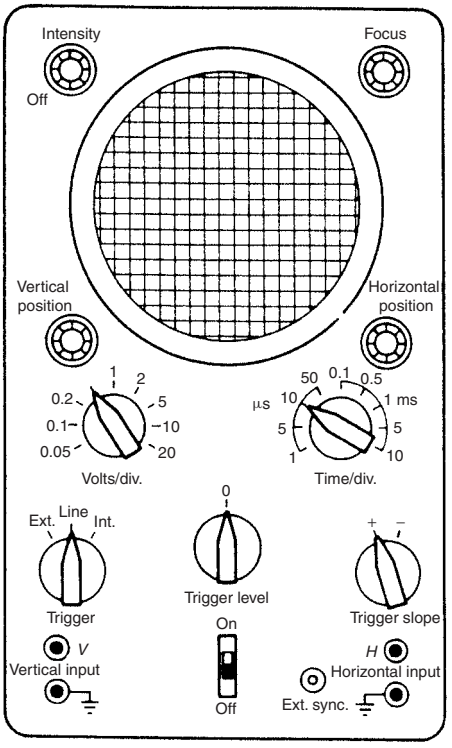

Fig. 6.13 Controls of a simple oscilloscope.

Application of potentials to two sets of deflector plates mounted at right angles to one another within the tube provide for deflection of the stream of electrons, such that the spot where the electrons are focused on the screen is moved. The two sets of deflector plates are normally known as the horizontal and vertical deflection plates, according to the respective motion caused to the spot on the screen. The magnitude of any signal applied to the deflector plates can be calculated by measuring the deflection of the spot against a crossed-wire graticule etched on the screen.

In the oscilloscope's most common mode of usage measuring time-varying signals, the unknown signal is applied, via an amplifier, to the y-axis (vertical) deflector plates and a timebase to the x-axis (horizontal) deflector plates. In this mode of operation, the display on the oscilloscope screen is in the form of a graph with the magnitude of the unknown signal on the vertical axis and time on the horizontal axis.

6.3.2 Channel

One channel describes the basic subsystem of an electron source, focusing system and deflector plates. This subsystem is often duplicated one or more times within the cathode ray tube to provide a capability of displaying two or more signals at the same time on the screen. The common oscilloscope configuration with two channels can therefore display two separate signals simultaneously.

6.3.3 Single-ended input

This type of input only has one input terminal plus a ground terminal per oscilloscope channel and, consequently, only allows signal voltages to be measured relative to ground. It is normally only used in simple oscilloscopes.

6.3.4 Differential input

This type of input is provided on more expensive oscilloscopes. Two input terminals plus a ground terminal are provided for each channel, which allows the potentials at two non-grounded points in a circuit to be compared. This type of input can also be used in single-ended mode to measure a signal relative to ground by using just one of the input terminals plus ground.

6.3.5 Timebase circuit

The purpose of a timebase is to apply a voltage to the horizontal deflector plates such that the horizontal position of the spot is proportional to time. This voltage, in the form of a ramp known as a sweep waveform, must be applied repetitively, such that the motion of the spot across the screen appears as a straight line when a d.c. level is applied to the input channel. Furthermore, this timebase voltage must be synchronized with the input signal in the general case of a time-varying signal, such that a steady picture is obtained on the oscilloscope screen. The length of time taken for the spot to traverse the screen is controlled by a *time/div* switch, which sets the length of time taken by the spot to travel between two marked divisions on the screen, thereby allowing signals at a wide range of frequencies to be measured.

Each cycle of the sweep waveform is initiated by a pulse from a pulse generator. The input to the pulse generator is a sinusoidal signal known as a triggering signal, with a pulse being generated every time the triggering signal crosses a preselected slope and voltage level condition. This condition is defined by the *trigger level* and *trigger slope* switches. The former selects the voltage level on the trigger signal, commonly zero, at which a pulse is generated, whilst the latter selects whether pulsing occurs on a positive- or negative-going part of the triggering waveform.

Synchronization of the sweep waveform with the measured signal is most easily achieved by deriving the trigger signal from the measured signal, a procedure that is known as *internal triggering*. Alternatively, *external triggering* can be applied if the frequencies of the triggering signal and measured signals are related by an integer constant such that the display is stationary. External triggering is necessary when the amplitude of the measured signal is too small to drive the pulse generator, and it is also used in applications where there is a requirement to measure the phase difference between two sinusoidal signals of the same frequency. It is very convenient to use the 50 Hz line voltage for external triggering when measuring signals at mains frequency, and this is often given the name *line triggering*.

6.3.6 Vertical sensitivity control

This consists of a series of attenuators and pre-amplifiers at the input to the oscilloscope. These condition the measured signal to the optimum magnitude for input to the main

amplifier and vertical deflection plates, thus enabling the instrument to measure a very wide range of different signal magnitudes. Selection of the appropriate input amplifier/attenuator is made by setting a *volts/div* control associated with each oscilloscope channel. This defines the magnitude of the input signal that will cause a deflection of one division on the screen.

6.3.7 Display position control

This allows the position at which a signal is displayed on the screen to be controlled in two ways. The horizontal position is adjusted by a *horizontal position* knob on the oscilloscope front panel and similarly a *vertical position* knob controls the vertical position. These controls adjust the position of the display by biasing the measured signal with d.c. voltage levels.

6.4 Digital storage oscilloscopes

Digital storage oscilloscopes consist of a conventional analogue cathode ray oscilloscope with the added facility that the measured analogue signal can be converted to digital format and stored in computer memory within the instrument. This stored data can then be reconverted to analogue form at the frequency necessary to refresh the analogue display on the screen. This produces a non-fading display of the signal on the screen.

The signal displayed by a digital oscilloscope consists of a sequence of individual dots rather than a continuous line as displayed by an analogue oscilloscope. However, as the density of dots increases, the display becomes closer and closer to a continuous line, and the best instruments have displays that look very much like continuous traces. The density of the dots is entirely dependent upon the sampling rate at which the analogue signal is digitized and the rate at which the memory contents are read to reconstruct the original signal. Inevitably, the speed of sampling etc. is a function of cost, and the most expensive instruments give the best performance in terms of dot density and the accuracy with which the analogue signal is recorded and represented.

Besides their ability to display the magnitude of voltage signals and other parameters such as signal phase and frequency, some digital oscilloscopes can also compute signal parameters such as peak values, mean values and r.m.s. values. They are also ideally suited to capturing transient signals when set to single-sweep mode. This avoids the problem of the very careful synchronization that is necessary to capture such signals on an analogue oscilloscope. In addition, digital oscilloscopes often have facilities to output analogue signals to devices like chart recorders and output digital signals in a form that is compatible with standard interfaces like IEEE488 and RS232. Some now even have floppy disk drives to extend their storage ability. Fuller details on digital oscilloscopes can be found elsewhere Hickman, (1997).

References and further reading

Hickman, I. (1997) *Digital Storage Oscilloscopes*, Newnes.