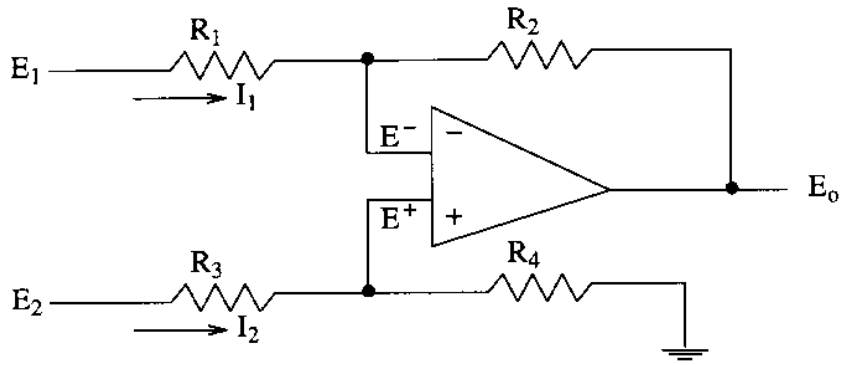

Figure 27: Differential amplifier

Because they are equal, lets denote e^+ and e^- by e_A. Summing currents flowing into the junctions closest to the input terminals of the op amp yields:

$$\frac{e_1 - e_A}{R_1} + \frac{e_o - e_A}{R_2} = 0$$

and

$$\frac{e_2 - e_A}{R_3} + \frac{0 - e_A}{R_4} = 0$$

Rearranging one can express e_A as a function of e_1 and e_o or as a function of e_2.

$$e_A = \frac{R_2}{R_1 + R_2} e_1 + \frac{R_1}{R_1 + R_2} e_o = \frac{R_4}{R_3 + R_4} e_2$$

and thus:

$$e_o = \frac{R_1 + R_2}{R_1} \left[\frac{R_4}{R_3 + R_4} e_2 - \frac{R_2}{R_1 + R_2} e_1 \right]$$

Furthermore, if $R_1 = R_3$ and $R_2 = R_4$:

$$e_o = \frac{R_2}{R_1} \; e_2 - e_1 \tag{38}$$

That is, the circuit amplifies the difference between e_2 and e_1, hence it is called a differential amplifier.

ACTIVE FILTER DESIGN

As we discussed in the loading section joining systems together can cause problems because of interaction effects. This can be solved by designing systems with low output impedances and high input impedances. It is almost impossible to achieve this consistently with passive filters. We therefore use operational amplifiers, either as impedance buffers or as

an integral part of the filter circuit. Both approaches will be demonstrated in this section. An added advantage of using active devices is the capability of increasing the static gain of the filter. The term active is used because the op amps themselves require their own power supply, whereas the filters described earlier in the chapter are passive containing only impedances.

An Active Low Pass Filter

Consider the following circuit:

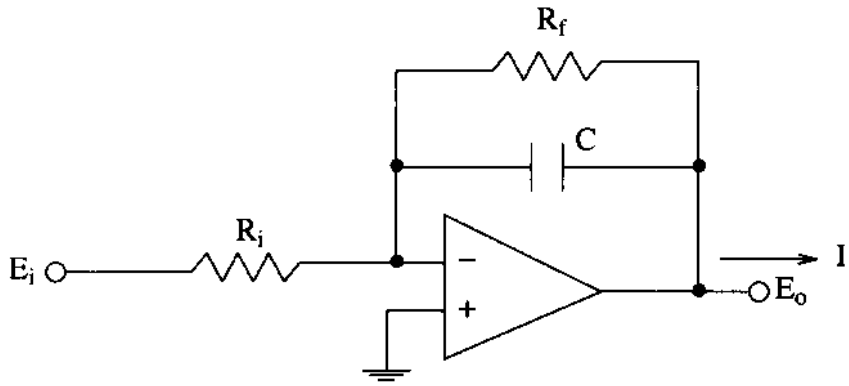

Figure 28: Low pass filter

By using the two rules governing op amp operation (see page 7-18) we can show that:

$$\frac{E_o}{E_i} = -\frac{Z_f}{Z_i} = -\frac{\dfrac{R_f}{R_f C j\omega + 1}}{R_i} = -\frac{R_f}{R_i}\frac{1}{\tau j\omega + 1} \tag{39}$$

where $\tau = R_f C$. Notice that the gain can be made larger than unity. The input impedance of this circuit is effectively R_i, which may or may not be adequately large. If R_i is too large, either R_f must be exorbitantly large or the static gain must be restricted. Op amps have an upper limit on resistive values used in their input and feedback networks. If these resistive values are too large, the offset voltages, due to imperfections in the op amp operation, become large also.

A second circuit which has a much higher input impedance is that of a low pass filter connected to the non-inverting terminal of an op amp as shown in Figure 29.

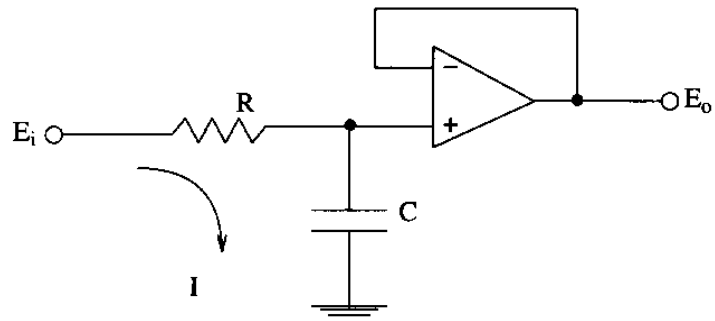

Figure 29: Passive low pass filter plus follower

The frequency response function of this circuit is:

$$\frac{E_o}{E_i}(j\omega) = +\frac{1}{\tau j\omega + 1} \quad , \quad \tau = RC \tag{40}$$

The output of the filter terminates in the high impedance of the non-inverting input of the op amp, and so for frequencies well below the cut-off frequency, $\omega \ll (RC)^{-1}$, the input impedance as seen by e_i is very large. It is, however, limited by the series impedance $R + \frac{1}{Cj\omega}$. The output impedance of the follower is essentially that of the op amp, i.e., low, and hence the input impedance of the next stage is much higher than it is.

A perfectly buffered low pass filter circuit is shown in Figure 30. This has unity gain in the pass band of the filter. The gain of the circuit can be increased by employing a follower with a circuit of the form shown in Figure 31.

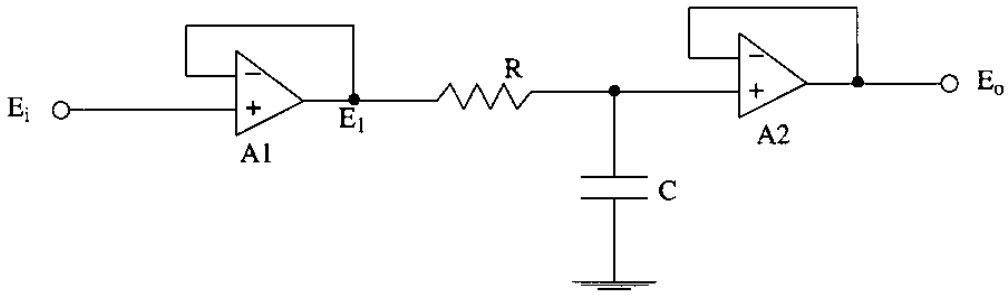

Figure 30: Perfectly buffered low pass filter

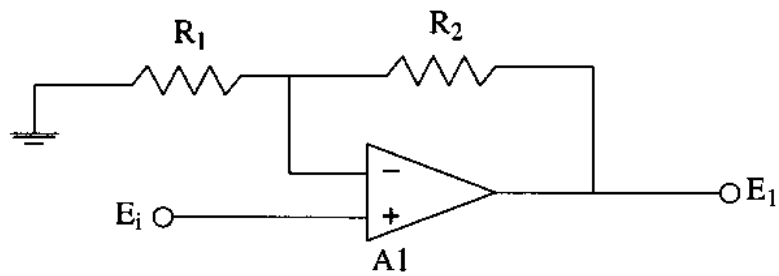

Figure 31: Combined amplifier and buffer

$$\frac{e_1}{e_i} = 1 + \frac{R_2}{R_1}$$

hence

$$\frac{e_o}{e_i} = \frac{1 + R_2 / R_1}{\tau j\omega + 1} \tag{41}$$

An Active Band Pass Filter

A bandpass network can be synthesized as follows:

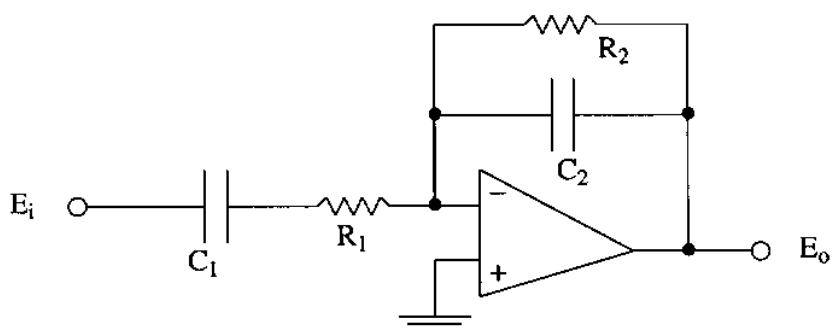

Figure 32: Bandpass Filter

$$\frac{E_o}{E_i}(j\omega) = -\frac{Z_f}{Z_i} = -\frac{\dfrac{R_2}{R_2 C_2 j\omega + 1}}{R_1 + \dfrac{1}{C_1 j\omega}} = -\frac{R_2 C_1 j\omega}{(\tau_1 j\omega + 1)(\tau_2 j\omega + 1)}$$

$$= -\frac{R_2}{R_1} \frac{\tau_1 j\omega}{(\tau_1 j\omega + 1)(\tau_2 j\omega + 1)} \tag{42}$$

Again it can be seen that the amplitude ratio in the pass band can be made greater than unity by adjusting R_2 / R_1.

Another circuit which employs a follower amplifier with gain to prevent loading between stages and at the output is:

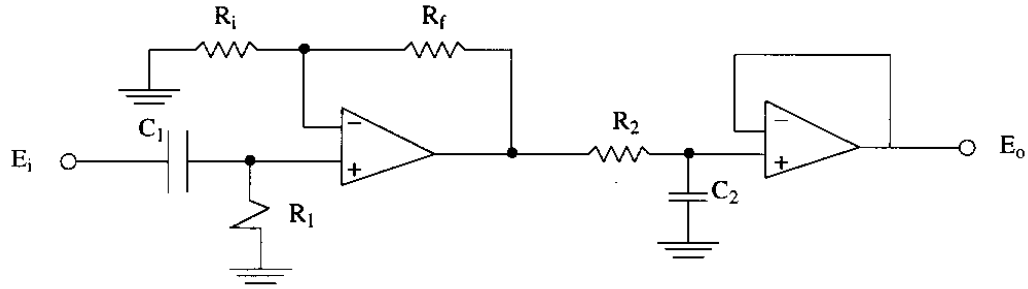

Figure 33: Bandpass filter

$$\frac{E_o}{E_i}(j\omega) = \left(1 + \frac{R_f}{R_i}\right)\frac{\tau_1 j\omega}{(\tau_1 j\omega + 1)(\tau_2 j\omega + 1)} \tag{43}$$

where $\tau_1 = R_1C_1, \tau_2 = R_2C_2$. Amplifier A1 serves as an impedance buffer between the high pass and low pass stages as well as increasing the gain in the pass band.

SUMMARY

In this chapter we have considered the design of filters and the problems that occur when connecting subsystems together. In particular, loading effects cause the frequency response function of the system to no longer be equal to the product of the frequency response functions of the subsystems; each connection introduces a loading term. In order to reduce loading effects we need to incorporate op amps into the design of the subsystems. With the use of op amps we can design subsystems with low output impedances and high input impedances, the loading terms tend to one and the frequency response function of the connected system is approximately the product of the frequency response functions of the individual subsystems.

Op amps have high input impedances and low output impedances, although one should be careful not to undermine their high input impedances by connecting low impedances to the input terminals. In the basic configuration (see Figure 24) the frequency response function is $-Z_f / Z_i$ and the input impedance is Z_i, because in this configuration the input inverting terminal is at 0 Volts, and is termed a virtual ground. The input voltage then sees the impedance Z_i when looking into the op amp circuit. There are two basic rules for op amps, which should be used when deriving the frequency response functions of circuits with op amps. First: no current flows through the op amp and secondly: the voltages at the inverting and non-inverting inputs terminals are equal.

The last part of the chapter was a brief introduction to the use of op amps in active filter design.