CHAPTER 3

Basic Electrical Components

3.1 Introduction

Resistors, capacitors, and inductors—these are the three basic passive elements used in electrical circuits, either as individual devices or in combination. These elements are used as loads, delays, and current limiting devices. Capacitors are used as dc blocking devices, in level shifting, integrating, differentiating, filters, frequency determination, selection, and delay circuits. Inductive devices can be extended to cover analog meter movements, relays, audio to electrical conversion, electrical to audio conversion, and electromagnetic devices. They are also the basis for transformers and motors.

3.2 Circuits with R, L, and C

Passive components are extensively used in ac circuits for frequency selection, noise suppression, and so forth, and are always present as parasitic components, limiting signal response and introducing unwanted delays. These components also cause phase shift between voltages and currents, which has to be taken into account when evaluating the performance of ac circuits.

3.2.1 Voltage Step Input

When a dc voltage is applied to the series resistor-capacitor circuit shown in Figure 3.1(a) a current flows in the elements, charging the capacitor. Figure 3.1(b) shows the input voltage step, the resulting current flowing, and the voltages across the resistor and the capacitor. Initially, all the voltage is dropped across the resistor. Although current is flowing into the capacitor, there is no voltage drop across the capacitor. As the capacitor charges, the voltage across the capacitor builds up exponentially, and the voltage across the resistor starts to decline, until eventually the capacitor is fully charged and current ceases to flow. The voltage across the capacitor is then equal to the supply voltage, and the voltage across the resistor is zero.

It should be noted that the current flowing through the resistor and into the capacitor is the same for both components, but the voltages across each component are different. That is, when the current flowing in the resistor is a maximum, the voltage across the resistor is a maximum, given by $E = IR$, and the voltage is said to be in phase with the current. In the case of the capacitor, the voltage is zero when the current flowing is a maximum, and the voltage is a maximum when the current is

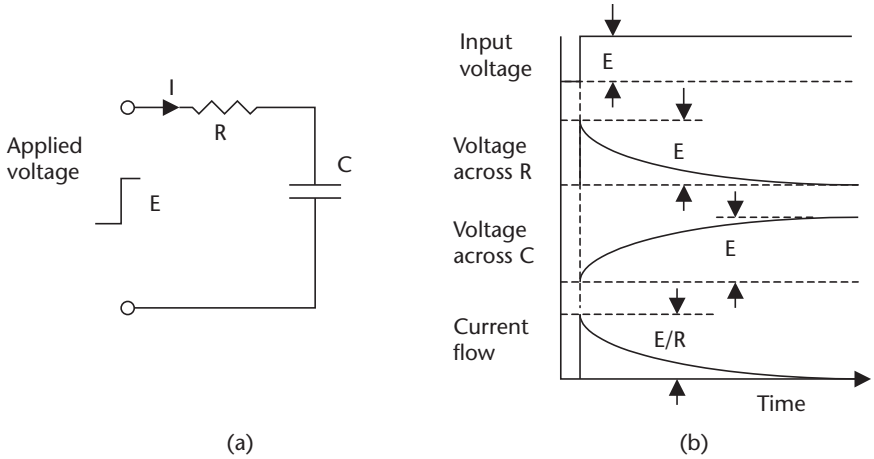

Figure 3.1 (a) Input voltage transient to a circuit with resistance and capacitance, and (b) associated waveforms.

zero. In this case, the voltage lags the current, or there is a phase shift between the voltage and the current of 90°. The voltage across the capacitor builds up exponentially, at a rate determined by the values of the resistor and the capacitor.

When a dc voltage is applied to a series inductance circuit resistance, as shown in Figure 3.2(a) a current will build up, Figure 3.2(b) shows the input voltage step, the resulting current buildup, and the voltages across the resistor and the inductor the inductance will initially appear as a high impedance preventing current from flowing. The current will be zero, the supply voltage will appear across the inductance, and there will be zero voltage across the resistor. After the initial turn-on, current will start to flow and build up, the voltage across the resistor will increase, and then start to decrease across the inductance. This allows the current to build up exponentially, until the current flow is limited by the resistance at its maximum value and the voltage across the inductance will be zero. The effects are similar to those that occur when a dc voltage is applied to a series R.C. network. The voltage and current in the resistor are in phase, but in the inductor are out of phase. That is,

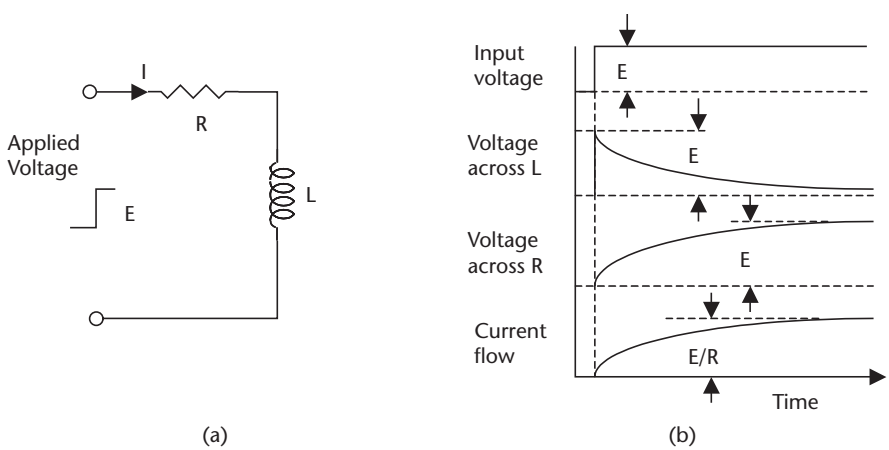

Figure 3.2 (a) Input voltage transient to a circuit with resistance and inductance, and (b) associated waveforms.

in this case, the voltage appears across the inductance before the current starts to flow, and goes to zero when the current is at its maximum, so that the voltage leads the current, and there is a phase shift between the voltage and the current of 90°. The voltage across the resistor increases exponentially, at a rate determined by the value of the inductance and resistance.

3.2.2 Time Constants

In an RC network when a step voltage is applied, as shown in Figure 3.1(a), the voltage across the capacitor is given by the equation [1]:

$$E_C = E\left(1 - e^{-t/RC}\right) \tag{3.1}$$

where E_C is the voltage across the capacitor at any instant of time, E is the source voltage, t is the time (seconds) after the step is applied, R is in ohms and C is in farads.

Conversely, after the capacitor is fully charged, and the step input voltage is returned to zero, C discharges and the voltage across the capacitor is given by the equation:

$$E_C = Ee^{-t/RC} \tag{3.2}$$

Similar equations apply to the rise and fall of currents in the inductive circuit shown in Figure 3.2(a).

Example 3.1

What is the voltage across the capacitor in Figure 3.1(a) 35 μs after the input voltage steps from 0V to 54V, if the value of the resistor is 47 kΩ and the capacitor is 1.5 μF?

$E_c = 54(1 - e^{-35 \times 1000000/1000 \times 47 \times 1000 \times 1.5})\text{V} = 54\ (1 - 1/e^{0.5})\text{V}$

$E_c = 54(1 - 0.606) = 21.3\text{V}$

The time constant of the voltage in a capacitive circuit from (3.1) and (3.2) is defined as:

$$t = CR \tag{3.3}$$

where t is the time (seconds) it takes for the voltage to reach 63.2% of its final or aiming voltage after the application of an input voltage step (charging or discharging). For example, by the end of the first time constant, the voltage across the capacitor will reach 9.48V when a 15V step is applied. During the second time constant, the voltage across the capacitor will rise another 63.2% of the remaining voltage step; that is, $(15 - 9.48)\text{V} \times 63.2\% = 3.49\text{V}$. At the end of two time constant periods, the voltage across the capacitor will be 12.97V, and at the end of three periods, the voltage will be 14.25V, and so forth. The voltage across the capacitor reaches 99% of its aiming value in 5 CR.

Example 3.2

What is the time constant for the circuit shown in Figure 3.1(a), if the resistor has a value of 220 kΩ, and the capacitor is 2.2 μF?

$$t = 2.2 \times 10^{-6} \times 220 \times 10^{3} \text{ sec} = 484 \times 10^{-3} \text{ sec} = 0.484 \text{ sec}$$

The RC time constant is often used as the basis for time delays. A comparator circuit is set to detect when a voltage across a capacitor in a CR network reaches 63.2% of the input step voltage. The time delay generated is then 1 CR.

In the case of an inductive circuit, the time constant for the current is given by;

$$t = L/R \tag{3.4}$$

where L is the inductance in Henrys, and t gives the time for the current to increase to 63.2% of its final current through the inductor.

Time constants apply not only to the rate of change of currents and voltages in electrical circuits when a step voltage is applied, but also to sensor outputs when there is a change in the measured variable. The output signal from the sensor changes exponentially, so that there is a delay before the sensor output reaches its final value. In the case of a temperature sensor, the time constant of the sensor is determined by factors such as its thermal mass.

3.2.3 Sine Wave Inputs

When an ac sine wave is applied to C, L, and R circuits, as shown in Figure 3.3(a) the same phase shift between voltage and current occurs as when a step voltage is applied. Figure 3.3(b) shows the relationship between the input voltage, the current flowing and the voltage across C, L, and R as can be seen. In resistive elements, the current and voltage are in phase; in capacitive circuits, the current leads the voltage

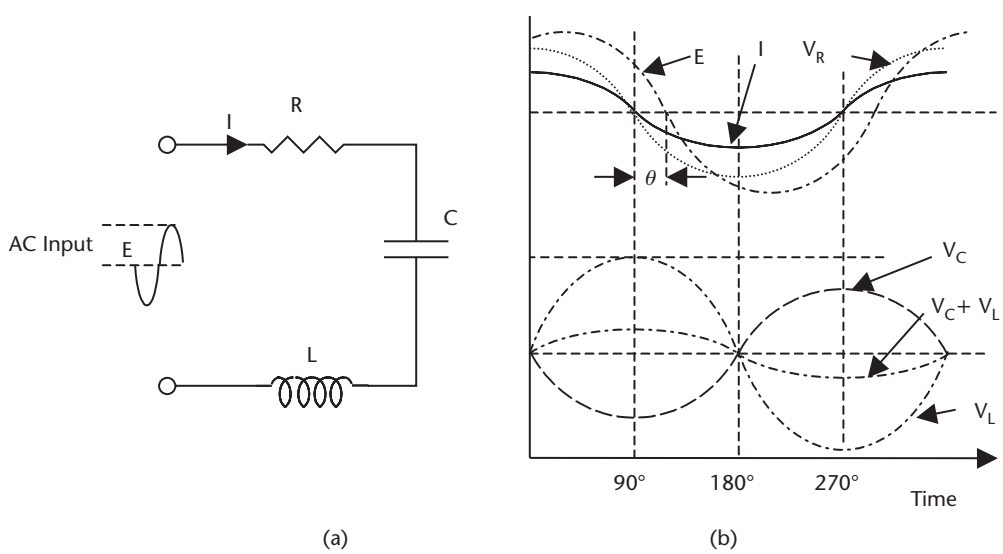

Figure 3.3 (a) Series R, C, and L circuits, and (b) waveforms and phase relations in a series circuit.

by 90° (Figure 3.1); and in inductive circuits, the current lags the voltage by 90° (Figure 3.2).

Since the voltages and the currents are not in phase in capacitive and inductive ac circuits, these devices have impedance and not resistance. Impedance and resistance cannot be directly added. If a resistor, capacitor, and inductor are connected in series as shown in Figure 3.3(a), then the same current will flow through all three devices. However, the voltages in the capacitor and inductor are 180° out of phase and 90° out of phase with the voltage in the resistor, respectively, as shown in Figure 3.3(b). However, they can be combined using vectors to give:

$$E^2 = V_R^2 + \left(V_L - V_C\right)^2 \tag{3.5}$$

where E is the supply voltage, V_R is the voltage across the resistor, V_L is the voltage across the inductor, and V_C is the voltage across the capacitor.

The vector addition of the voltages is shown in Figure 3.4. In Figure 3.4(a), the relations between V_R, V_L, and V_C are given. V_L and V_C lie on the x-axis, with one positive and the other negative, since they are 180° out of phase. Since they have opposite signs, they can be subtracted to give the resulting $V_C - V_L$ vector. V_R lies at right angles (90°) on the y-axis. In Figure 3.4(b), the $V_C - V_L$ and V_R vectors are shown with the resulting E vector, which, from the trigonometry function, gives (3.5).

The impedance (Z) of the ac circuit, as seen by the input is given by:

$$Z = \sqrt{\left(R^2 + \left[X_L - X_C\right]^2\right)} \tag{3.6}$$

where $X_C = 1/2\pi fC$, which is the impedance to an ac frequency of f hertz by a capacitor C farads, and $X_L = 2\pi fL$, which is the impedance to an ac frequency of f hertz by an inductance of L henries.

The current flowing in the circuit can be obtained from Ohm's Law, as follows:

$$I = E/Z \tag{3.7}$$

Example 3.3

What is the current flowing in the circuit shown in Figure 3.3 (a), if R = 27 kΩ, C = 2.2 nF, L = 33 mH, E = 20 V and the input frequency = 35 kHz?

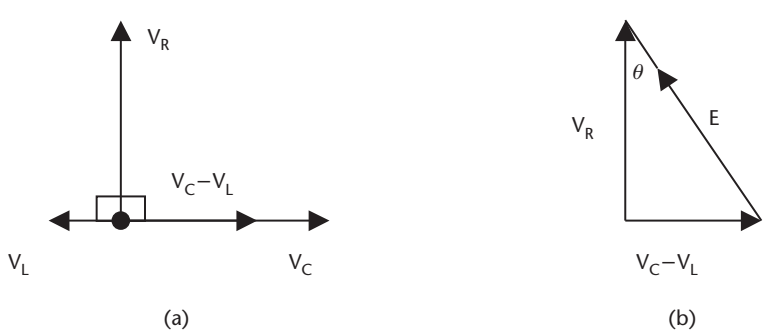

Figure 3.4 (a) The voltage vectors for the series circuit in Figure 3.5, and (b) the resulting voltage E vector.

$$X_L = 2\pi fL = 2 \times 3.142 \times 35 \times 10^3 \times 33 \times 10^{-3} = 7.25\Omega$$

$$X_C = \frac{1}{2\pi fC} = \frac{1}{2 \times 3.142 \times 35 \times 10^3 \times 2.2 \times 10^{-9}}\Omega = \frac{10^6}{483.56}\Omega = 2.1k\Omega$$

$$Z = \sqrt{\left(R^2 + \left[X_L - X_C\right]^2\right)} = \sqrt{\left\{\left(27 \times 10^3\right)^2 + \left[7.25 \times 10^3 - 2.1 \times 10^3\right]^2\right\}}$$

$$Z = \sqrt{\left\{729 \times 10^6 + 26.5 \times 10^6\right\}}$$

$$Z = \sqrt{\left(755.5 \times 10^6\right)} = 27.5 \times 10^3\,\Omega = 27.5k\Omega$$

$$I = E/Z = 20/27.5 \times 10^3 = 0.73mA$$

X_L and X_C are frequency-dependent, since as the frequency increases, X_L increases and X_C decreases. A frequency can be reached where X_L and X_C are equal, and the voltages across these components are equal, opposite, and cancel. At this frequency, $Z = R$, $E = IR$, and the current is a maximum. This frequency is called the *resonant frequency* of the circuit. At resonance:

$$2\pi fL = \frac{1}{2\pi fC} \tag{3.8}$$

which can be rewritten for frequency as

$$f = \frac{1}{2\pi\sqrt{LC}}Hz \tag{3.9}$$

When the input frequency is below the resonant frequency X_C is larger than X_L, and the circuit is capacitive; above the resonant frequency, X_L is larger than X_C, and the circuit is inductive. Plotting the input current against the input frequency shows a peak in the input current at the resonant frequency, as shown in Figure 3.5(a).

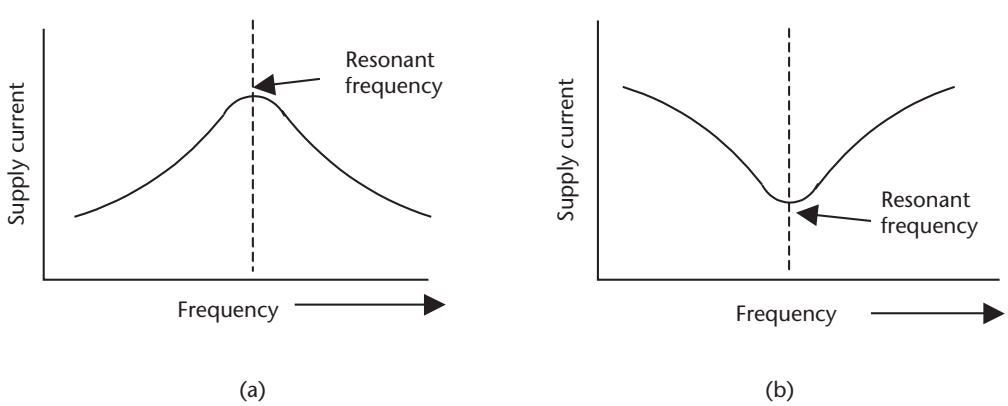

Figure 3.5 Supply current versus frequency in (a) series circuit, and (b) parallel circuit.

Example 3.4

What is the resonant frequency of the series circuit in Figure 3.3(a)? What is the current at this frequency? Assume the same values as in Example 3.3.

Using Equation (3.9), we get:

$$f = \frac{1}{2\pi\sqrt{LC}}\,Hz = \frac{1}{2 \times 3.142 \times \sqrt{2.2 \times 10^{-9} \times 33 \times 10^{-3}}}\,Hz$$

$$f = \frac{1}{2 \times 3.142 \times 8.5 \times 10^{-6}}\,Hz = \frac{10^6}{53.4}\,Hz = 1.87 \times 10^4\,Hz$$

$$f = 18.7\,kHz$$

The current can be obtained using Equation 3.7, at resonance $Z = R$.

$$I = E/Z = 20/18.7 \times 10^3 = 1.07 \text{ mA}$$

When R, L, and C are connected in parallel, as shown in Figure 3.6(a), each component will see the same voltage but not the same current, as shown by the waveforms in Figure 3.6(b).

The source current (I_S) is the vector sum of the currents in each component, and is given by:

$$I_S^{\,2} = I_R^{\,2} + \left(I_L - I_C\right)^2 \tag{3.10}$$

The impedance of the circuit (Z) as seen by the input is given by:

$$\frac{1}{Z^2} = \frac{1}{R^2} + \frac{1}{\left(X_L - X_C\right)^2} \tag{3.11}$$

At the resonant frequency, I_L and I_C become equal and cancel, and the current (I) is given by:

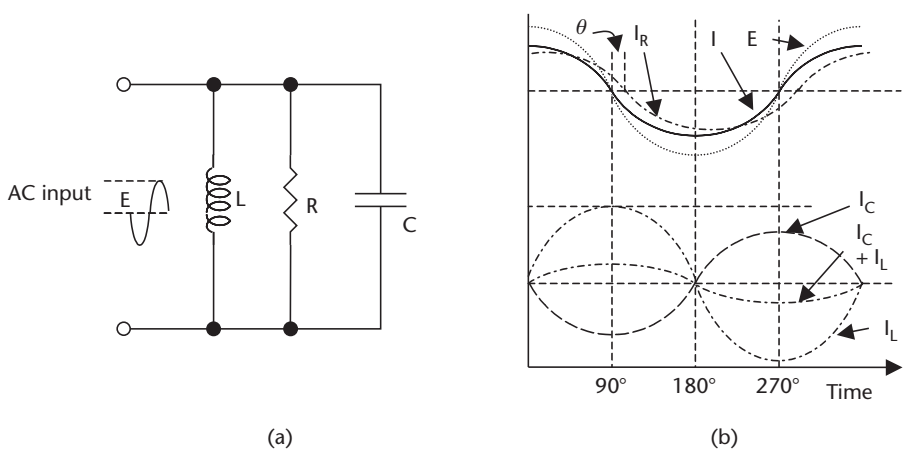

Figure 3.6 (a) Parallel R, C, and L circuits, and (b) waveforms and phase relations in a parallel circuit.

$$I = I_L = I_C = V \times 2\pi fC = V/2\pi fL \tag{3.12}$$

Thus, at resonance, $E = IR$, as seen from (3.10). Below the resonant frequency, the circuit is inductive, and above the resonant frequency, the circuit is capacitive. Plotting the current against frequency shows the current is a minimum at the resonant frequency, as shown in the frequency plot in Figure 3.5(b). The frequency at resonance is given by (3.9), and the current is given by (3.7).

3.3 RC Filters

Passive networks using resistors and capacitors are extensively used [2], and sometimes small inductors are used in instrumentation circuits for filtering out noise, frequency selection, and frequency rejection, and so forth. Filters can be either passive [3] or active (using amplifiers), and are divided into the following types.

- *High-pass*. Allows high frequencies to pass but blocks low frequencies;
- *Low-pass*. Allows low frequencies to pass but blocks high frequencies;
- *Band-pass*. Allows a specific range of frequencies to pass;
- *Band reject*. Blocks a specific range of frequencies;
- *Twin – T*. Form of band reject filter, but with a sharper response characteristic.

Figure 3.7(a) shows a first order and second order low-pass RC filter [4], which passes low frequencies and rejects high frequencies, as shown in the frequency response curve in Figure 3.7(b). The cutoff frequency (f_c) of a filter is defined as the frequency at which the output power is reduced to one-half of the input power (−3 dB, or the output voltage is $0.707V_{in}$). In the case of the first order low-pass filter, the cutoff frequency is given by:

$$f_c = 1/2\pi RC \tag{3.13}$$

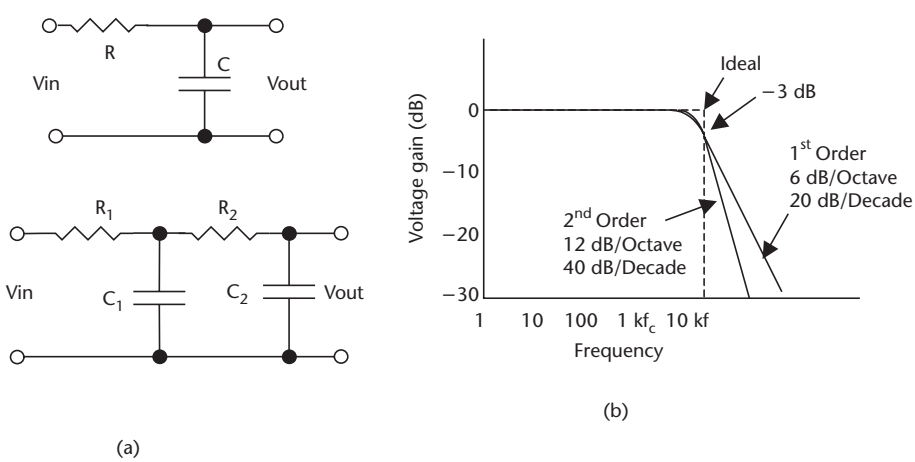

Figure 3.7 (a) First order and second order low-pass filters, and (b) gain-frequency characteristics of first order and second order filters.

In the case of the second order low-pass filter, the cutoff frequency is given by:

$$f_c = \frac{1}{2\pi\sqrt{R_1 R_2 C_1 C_2}} Hz \tag{3.14}$$

The output voltage drops off at 20 dB/decade with a first order filter, 40 dB/decade for a second order filter, 60 dB/decade for a third order filter, and so forth. There is also a phase change associated with filters: –45° for a first order filter, –90° for a second order filter, –135° for a third order filter, and so forth. The phase change can cause instability in active circuits [5].

The input to output voltage ratio for any frequency (f) for a first order low-pass filter is given by:

$$\frac{V_{out}}{V_{in}} = \frac{1}{\left[1+(f/f_c)^2\right]^{1/2}} \tag{3.15}$$

The circuit for a high-pass, band-pass, and twin-T passive filters are shown in Figure 3.8. The number of resistive and capacitive elements determines the order of the filter (e.g., first order, second order, and so forth). The circuit configuration determines the characteristics of the filters, such as Butterworth, Bessel, Chebyshev, and Legendre. Figure 3.8(d) shows the frequency characteristics of the filters shown in Figure 3.8(a–c) [6].

These are examples of the use of resistors and capacitors in RC networks. Further descriptions of filters can be found in electronic textbooks [7].

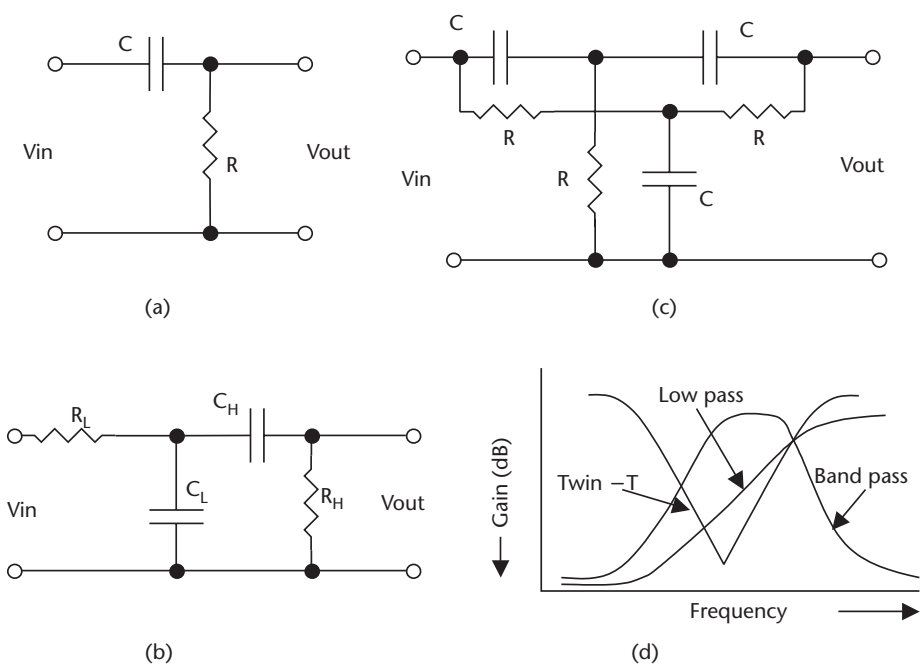

Figure 3.8 (a) High-pass filters, (b) band-pass filters, (c) twin-T band reject filters, and (d) their frequency characteristics.

3.4 Bridge Circuits

Resistor temperature compensation can be achieved in voltage divider circuits or bridge circuits. However, when trying to measure small changes in resistance, as required in strain gauges (see Section 11.3.4), the signal resolution in bridge circuits is much higher than with voltage dividers. Bridge circuits are used to convert small changes in impedance into voltages. These voltages are referenced to zero, so that the signals can be amplified to give high sensitivity to impedance changes.

3.4.1 Voltage Dividers

The two resistive elements R_1 and R_2 in a strain gauge sensor can be connected in series to form a voltage divider, as shown in Figure 3.9. The elements are driven from a supply, V_s. Since the temperature coefficient of resistance is the same in both elements, the voltage at the junction of the elements, V_R, is independent of temperature, and is given by:

$$V_R = \frac{R_2 V_S}{R_1 + R_2} \tag{3.16}$$

Example 3.5

The resistive elements in a strain gauge are each 5kΩ. A digital voltmeter with ranges of 10V, 1V, and 0.1V, and a resolution of 0.1% of FSD, is used to measure the output voltage. If R_2 is the fixed element and R_1 is the element measuring strain, what is the minimum change in R_1 that can be detected? Assume a supply of 10V.

To measure the output voltage ≈ 5V, the 10V range is required, giving a resolution or sensitivity of 10 mV.

V_R = 5.01V = 5,000 × 10/(R_1 + 5,000)V
5.01(R_1 + 5,000) = 50,000
R_1 = (50,000/5.01) − 5,000 = 4,980Ω
Resolution = 5,000 − 4,980 = 20Ω

3.4.2 dc Bridge Circuits

The simplest and most common bridge network is the DC Wheatstone bridge. The basic bridge is shown in Figure 3.10; this bridge is used in sensor applications, where small changes in resistance are to be measured. The basic bridge is modified for use in many other specific applications. In the basic bridge four resistors are connected

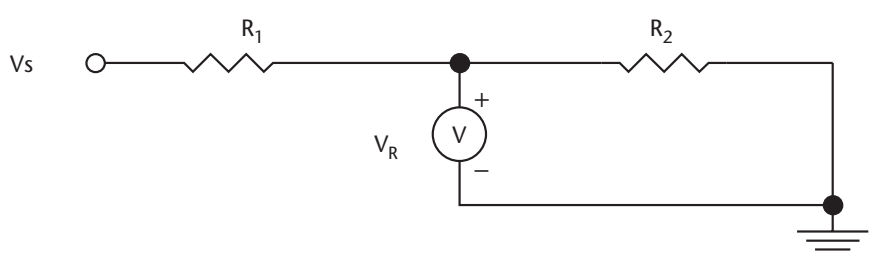

Figure 3.9 Voltage divider.

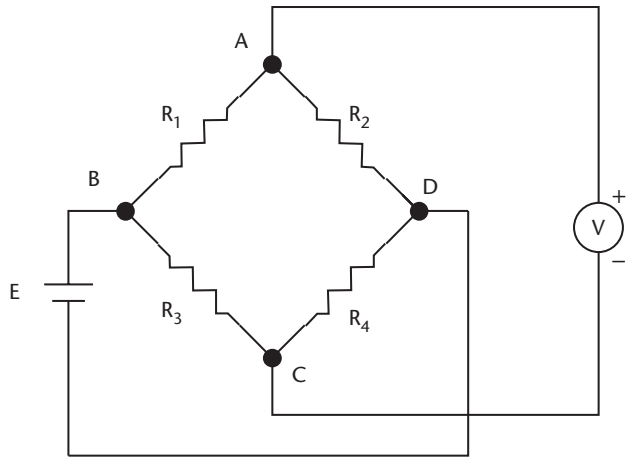

Figure 3.10 Circuit of a basic Wheatstone bridge.

in the form of a diamond with the supply and measuring instruments connected across the bridge as shown. When all the resistors are equal the bridge is balanced; that is, the bridge voltage at A and C are equal (E/2), and the voltmeter reads zero. Making one of the resistors a variable resistor the bridge can be balanced.

$$\text{The voltage at point C referenced to D} = E \times R_4/(R_3 + R_4)$$
$$\text{The voltage at point A referenced to D} = E \times R_2/(R_1 + R_2)$$
$$\text{The voltage (V) between A and C} = E\,R_4/(R_3 + R_4) - E\,R_2/(R_1 + R_2) \tag{3.17}$$

When the bridge is balanced V = 0,

$$\text{and } R_3R_2 = R_1R_4 \tag{3.18}$$

It can be seen from (3.17) that if R_1 is the resistance of a sensor whose change in value is being measured, the voltage at A will increase with respect to C as the resistance value decreases, so that the voltmeter will have a positive reading. The voltage (V) will change in proportion to small changes in the value of R_1, making the bridge very sensitive to small changes in resistance. Resistive sensors such as strain gauges are temperature sensitive and are often configured with two elements that can be used in a bridge circuit to compensate for changes in resistance due to temperature changes, for instance, if R_1 and R_2 are the same type of sensing element. Then resistance of each element will change by an equal percentage with temperature, so that the bridge will remain balanced when the temperature changes. If R_1 is now used to sense a variable, the voltmeter will only sense the change in R_1 due to the change in the variable, not the change due to temperature [8].

Example 3.6

Resistors R_1 and R_2 in the bridge circuit shown in Figure 3.9 are the strain gauge elements used in Example 3.5. Resistors R_3 and R_4 are fixed resistors, with values of 4.3 kW. The digital voltmeter is also the same meter. What is the minimum change in R_1 that can be detected by the meter? Assume the supply E is 10V.

The voltage at point C will be 5.0V, because $R_3 = R_4$, and the voltage at C equals one-half of the supply voltage. The voltmeter can use the 0.1V range, because the offset is 0V, giving a resolution of 0.1 mV. The voltage that can be sensed at A is given by:

$$E_{AD} = 10 \times R_2/(R_1 + R_2) = 5.00 + 0.0001\text{V}$$

$$R_1 = (50{,}000/50{,}001) - 5{,}000\Omega$$

$$R_1 = -49{,}999$$

$$\text{Resolution} = 1\Omega$$

This example shows the improved resolution obtained by using a bridge circuit over the voltage divider in Example 3.5.

Lead Compensation

In many applications, the sensing resistor (R_2) may be remote from a centrally located bridge. The resistance temperature device (RTD) described in Sections 10.3.2 and 15.3.4 is an example of such a device. In such cases, by using a two-lead connection as in Figure 3.10, adjusting the bridge resistor (R_4) can zero out the resistance of the leads, but any change in lead resistance due to temperature will appear as a sensor value change. To correct this error, lead compensation can be used. This is achieved by using three interconnecting leads, labeled (a), (b), and (c) in Figure 3.11. A separate power lead (c) is used to supply R_2. Consider point D of the bridge as now being at the junction of the supply and R_2. The resistance of lead (b) is now a part of resistor R_4 and the resistance of lead (a) is now a part of remote resistor R_2. Since both leads have the same length with the same resistance and in the same environment, any changes in the resistance of the leads will cancel, keeping the bridge balanced.

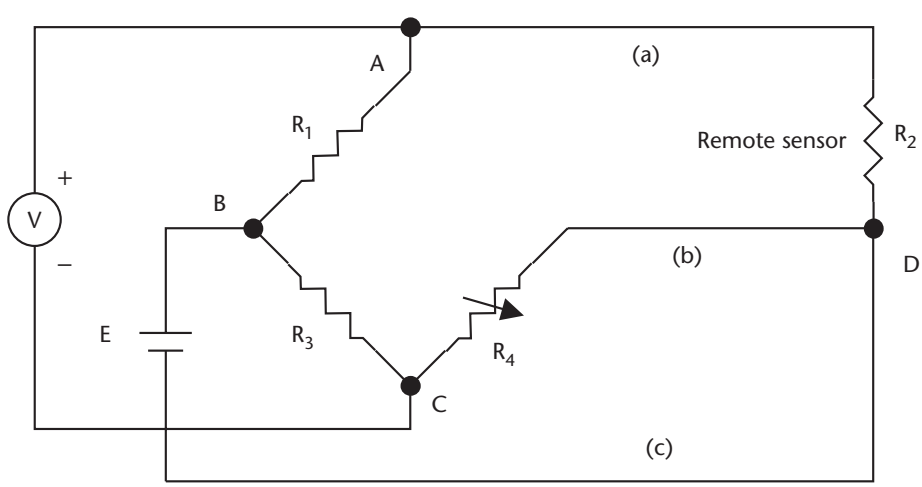

Figure 3.11 Circuit of a Wheatstone bridge with compensation for lead resistance used in remote sensing.

Current Balanced Bridge

A current feedback loop can be used to automatically null the Wheatstone bridge, as shown in Figure 3.12. A low-value resistor R_5 is connected in series with resistor R_2. The output from the bridge is amplified and converted into a current I, which is fed through R_5 to develop an offset voltage, keeping the bridge balanced. The current through R_5 can then be monitored to measure any changes in R_2. The bridge is balanced electronically to give a fast response time, and there are no null potentiometers to wear out. Initially, when the bridge is at null with zero current from the feedback loop:

$$R_3\,(R_2 + R_5) = R_1 \times R_4$$

assume R_2 changes to $R_2 + \delta R_2$.

Then, to rebalance the bridge;

$$R_3\,(R_2 + \delta R_2 + R_5) - IR_5 = R_1 \times R_4$$

Subtracting the equations

$$\delta \mathrm{R}_2 = IR_5/R_3 \tag{3.19}$$

showing a linear relationship between changes in the sensing resistor and the feedback current, with R_5 and R_3 having fixed values.

Due to the two features of high sensitivity to small changes in resistance and correction for temperature effects, bridges are extensively used in instrumentation with strain gauges, piezoresistive elements, and magnetoresistive elements. The voltmeter should have a high resistance, so that it does not load the bridge circuit. Bridges also can be used with ac supply voltages and ac meters, not only for the

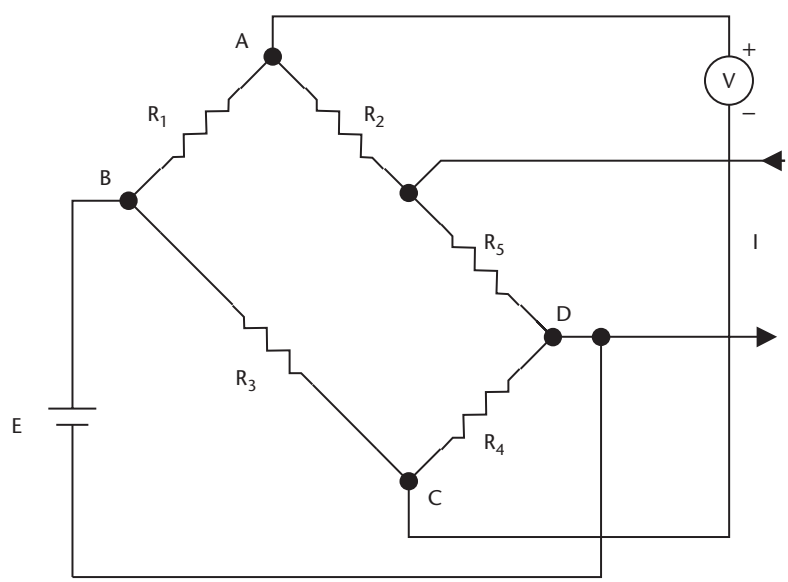

Figure 3.12 Current balanced Wheatstone bridge.

measurement of resistance, but also for the measurement of capacitance, inductance, or a combination of resistance, capacitance, and inductance [9].

3.4.3 ac Bridge Circuits

The basic concept of dc bridges can also be extended to ac bridges, the resistive elements are replaced with impedances, as shown in Figure 3.13(a). The bridge supply is now an ac voltage. This type of set up can be used to measure small changes in capacitance as required in the capacitive pressure sensor shown in Figure 7.5 in Chapter 7. The differential voltage δV across *S* is then given by:

$$\delta V = E\frac{Z_2 Z_3 - Z_1 Z_4}{(Z_1 + Z_3)(Z_2 + Z_4)} \tag{3.20}$$

where *E* is the ac supply electromotive force (EMF).

When the bridge is balanced, $\delta V = 0$, and (3.20) reduces to:

$$Z_2 Z_3 = Z_1 Z_4 \tag{3.21}$$

Or

$$R_2(R_3 + j/\omega C_1) = R_1(R_4 + J/\omega C_2)$$

Because the real and imaginary parts must be independently equal

$$R_3 \times R_2 = R_1 \times R_4 \tag{3.22}$$

and

$$R_2 \times C_2 = R_1 \times C_1 \tag{3.23}$$

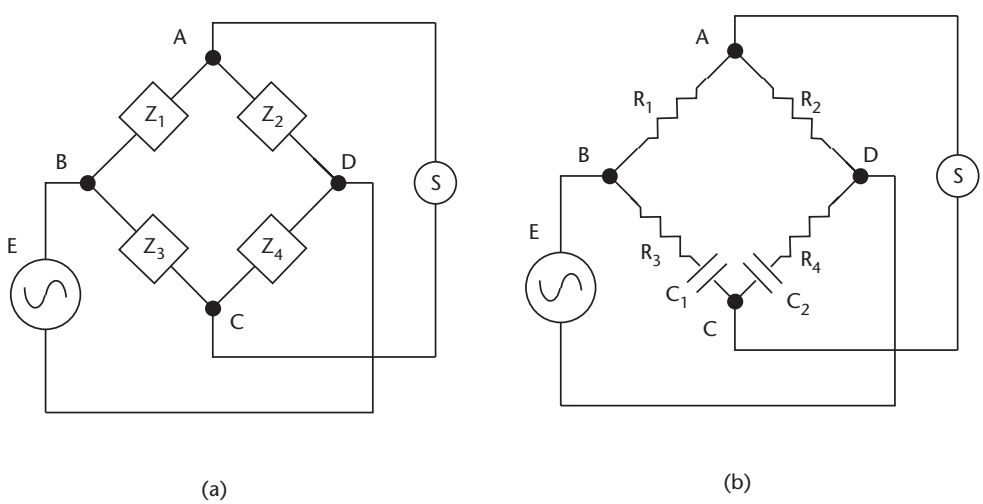

Figure 3.13 (a) An ac bridge using block impedances, and (b) a bridge with R and C components, as described in Example 3.7.

Example 3.7

If the bridge circuit in Figure 3.13(b) is balanced, with $R_1 = 15$ kΩ, $R_2 = 27$ kΩ, $R_3 = 18$ kΩ, and $C_1 = 220$ pF, what are the values of R_4 and C_2?

$$R_2R_3 = R_1R_4$$

$$R_4 = 27 \times 18/15 = 32.4 \text{ k}\Omega$$

Additionally,

$$C_2R_2 = C_1R_1$$

$$C_2 = 220 \times 15/27 = 122 \text{ pF}$$

Bridge null voltage does not vary linearly with the amount the bridge is out of balance, as can be seen from (3.16). The variation is shown in Figure 3.14(a), so that ΔV should not be used to indicate out-of-balance unless a correction is applied. The optimum method is to use a feedback current to keep the bridge in balance, and measure the feedback current as in (3.19). Figure 3.14(b) shows that for an out-of-balance of less than 1%, the null voltage is approximately linear with ΔR.

3.5 Summary

The effects of applying step voltages to passive components were discussed. When applying a step waveform to a capacitor or inductor, it is easily seen that the currents and voltages are 90° out of phase. Unlike in a resistor, these phase changes give rise to time delays that can be measured in terms of time constants. The phase changes also apply to circuits driven from ac voltages, and give rise to impedances, which can be combined with circuit resistance to calculate circuit characteristics and frequency dependency. Their frequency dependence makes them suitable for frequency selection and filtering.

It is required to measure small changes in resistance in many resistive sensors, such as strain gauges. The percentage change is small, making accurate measurement difficult. To overcome this problem, the Wheatstone Bridge circuit is used. By

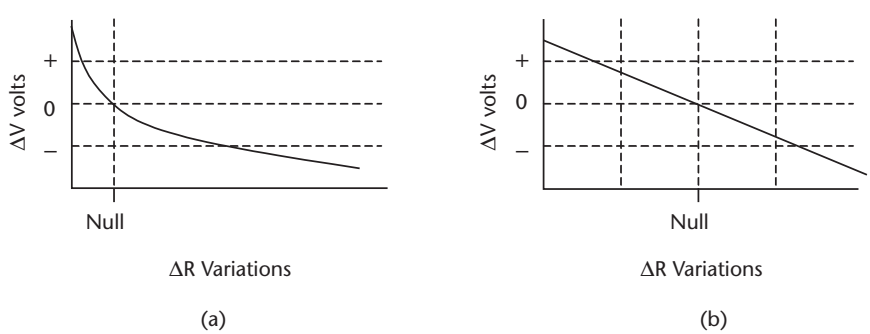

Figure 3.14 Bridge out-of-null voltage plotted against resistor variations, with (a) large variations, and (b) small variations.

comparing the resolution in a voltage divider and a bridge circuit, a large improvement in resolution of the bridge circuit can be seen. Bridge circuits also can be used for temperature compensation, compensation of temperature effects on leads in remote sensing, and with feedback for automatic measurement of resistive changes. The use of bridge networks also can be extended to measure changes in reactive components, as would be required in a capacitive sensor by the use of ac bridge configurations.

References

[1] Sutko, A., and J. D. Faulk, *Industrial Instrumentation,* 1st ed., Delmar Publishers, 1996, pp. 59–61.

[2] Bamble, S., "Demystifying Analog Filter Design," *Sensors Magazine*, Vol. 19, No. 2, February 2002.

[3] Ramson, E., "An Introduction to Analog Filters," *Sensors Magazine*, Vol. 18, No. 7, July 2001.

[4] Johnson, C. D., *Process Control Instrumentation Technology*, 7th ed., Prentice Hall, 2003, pp. 70–81.

[5] Humphries, J. T., and L. P. Sheets, *Industrial Electronics*, 4th ed., Delmar, 1993, pp. 7–11.

[6] Schuler, C. A., *Electronics Principles and Applications*, 5th ed., McGraw-Hill, 1999, pp. 243–245.

[7] Groggins, B., E. Jacobins, and C. Miranda, "Using an FPAA to Design a Multiple-Pole Filter for Low-g Sensing," *Sensors Magazine*, Vol. 15, No. 2, February 1998.

[8] Anderson, K., "Looking Under the (Wheatstone) Bridge," *Sensors Magazine*, Vol. 18, No. 6, June 2001.

[9] Johnson, C. D., *Process Control Instrumentation Technology*, 7th ed., Prentice Hall, 2003, pp. 58–69.