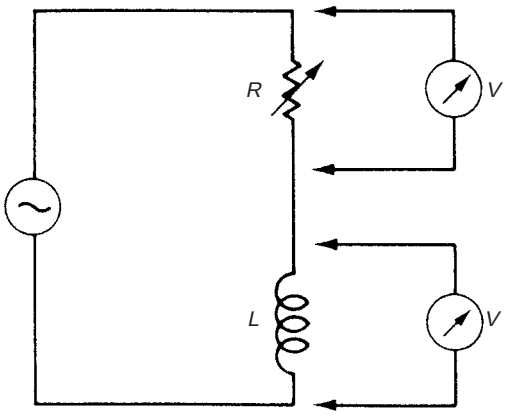

Fig. 7.13 Approximate method of measuring inductance.

7.3 Inductance measurement

The main device that has an output in the form of a change in inductance is the inductive displacement sensor. Inductance is measured in *henry* (H). It can only be measured accurately by an a.c. bridge circuit, and various commercial inductance bridges are available. However, when such a commercial inductance bridge is not immediately available, the following method can be applied to give an approximate measurement of inductance.

This approximate method consists of connecting the unknown inductance in series with a variable resistance, in a circuit excited with a sinusoidal voltage, as shown in Figure 7.13. The variable resistance is adjusted until the voltage measured across the resistance is equal to that measured across the inductance. The two impedances are then equal, and the value of the inductance L can be calculated from:

$$L = \frac{\sqrt{(R^2 - r^2)}}{2\pi f}$$

where R is the value of the variable resistance, r is the value of the inductor resistance and f is the excitation frequency.

7.4 Capacitance measurement

Devices that have an output in the form of a change in capacitance include the capacitive level gauge, the capacitive displacement sensor, the capacitive moisture meter and the capacitive hygrometer. Capacitance is measured in units of *Farads* (F). Like inductance, capacitance can only be measured accurately by an a.c. bridge circuit, and various types of capacitance bridge are available commercially. In circumstances where a proper capacitance bridge is not immediately available, and if an approximate measurement of capacitance is acceptable, one of the following two methods can be considered.

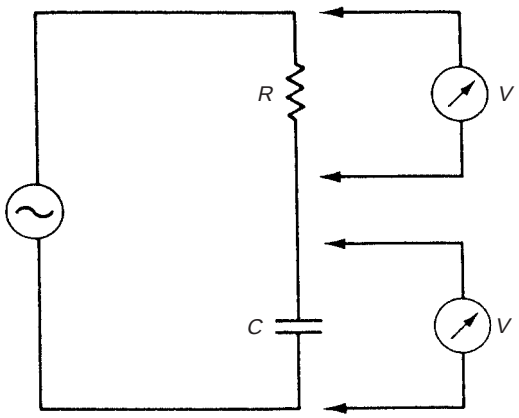

Fig. 7.14 Approximate method of measuring capacitance.

The first of these, shown in Figure 7.14, consists of connecting the unknown capacitor in series with a known resistance in a circuit excited at a known frequency. An a.c. voltmeter is used to measure the voltage drop across both the resistor and the capacitor. The capacitance value is then given by:

$$C = \frac{V_r}{2\pi f R V_c}$$

where V_r and V_c are the voltages measured across the resistance and capacitance respectively, f is the excitation frequency and R is the known resistance.

An alternative approximate method of measurement is to measure the time constant of the capacitor connected in an RC circuit.

7.4.1 Alphanumeric codes for capacitor values

As for resistors, it is often useful to know the approximate value of capacitors used in an a.c. bridge circuit and also in other applications. This need is satisfied by putting an alphanumeric code on capacitors during manufacture. The code consists of one letter and several numbers. The letter acts both as a decimal point and also as a multiplier for the value specified by the numbers in the code. The letters p, n, μ, m and F define multipliers of $\times 10^{-12}$, $\times 10^{-9}$, $\times 10^{-6}$, $\times 10^{-3}$, $\times 1$ respectively.

For example, p10 means 0.1 pF, 333p means 333 pF and 15n means 15 nF.

A separate letter indicating the tolerance is given after the value coding. The meaning of tolerance codes is as follows:

B = ±0.1% C = ±0.25% D = ±0.5% F = ±1% G = ±2%
J = ±5% K = ±10% M = ±20% N = ±30%

Hence, 333pK means a 333 pF capacitor with a tolerance of ±10%.

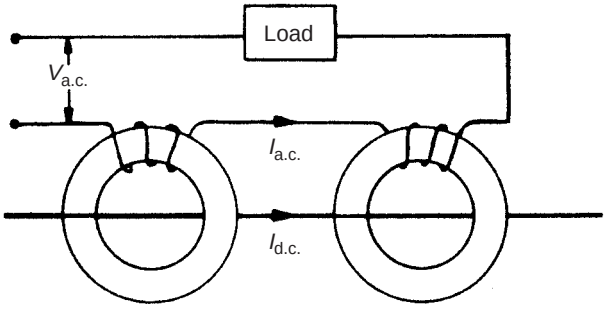

Fig. 7.15 Current transformer.

windings for similar reasons. A low-loss core material is used and flux densities are kept as small as possible to reduce losses. In the case of very high currents, the primary winding often consists of a single copper bar that behaves as a single-turn winding. The clamp-on meter, described in the last chapter, is a good example of this.

Apart from electromechanical meters, all the other instruments for measuring voltage discussed in Chapter 6 can be applied to current measurement by using them to measure the voltage drop across a known resistance placed in series with the current-carrying circuit. The digital voltmeter and electronic meters are widely applied for measuring currents accurately by this method, and the cathode ray oscilloscope is frequently used to obtain approximate measurements in circuit-test applications. Finally, mention must also be made of the use of digital and analogue multimeters for current measurement, particularly in circuit-test applications. These instruments include a set of switchable dropping resistors and so can measure currents over a wide range. Protective circuitry within such instruments prevents damage when high currents are applied on the wrong input range.

7.6 Frequency measurement

Frequency measurement is required as part of those devices that convert the measured physical quantity into a frequency change, such as the variable-reluctance velocity transducer, stroboscopes, the vibrating-wire force sensor, the resonant-wire pressure sensor, the turbine flowmeter, the Doppler-shift ultrasonic flowmeter, the transit-time ultrasonic flowmeter, the vibrating level sensor, the quartz moisture meter and the quartz thermometer. In addition, the output relationship in some forms of a.c. bridge circuit used for measuring inductance and capacitance requires accurate measurement of the bridge excitation frequency.

Frequency is measured in units of *hertz* (Hz). The digital counter-timer is the most common instrument for measuring frequency. The oscilloscope is also commonly used for obtaining approximate measurements of frequency, especially in circuit test and fault-diagnosis applications. Within the audio frequency range, the Wien bridge is a further instrument that is sometimes used.

7.6.1 Digital counter-timers

A digital counter-timer is the most accurate and flexible instrument available for measuring frequency. Inaccuracy can be reduced down to 1 part in 10^8, and all frequencies between d.c. and several gigahertz can be measured. The essential component within a counter-timer instrument is an oscillator that provides a very accurately known and stable reference frequency, which is typically either 100 kHz or 1 MHz. This is often maintained in a temperature-regulated environment within the instrument to guarantee its accuracy. The oscillator output is transformed by a pulse-shaper circuit into a train of pulses and applied to an electronic gate, as shown in Figure 7.16. Successive pulses at the reference frequency alternately open and close the gate. The input signal of unknown frequency is similarly transformed into a train of pulses and applied to the gate. The number of these pulses that get through the gate during the time that it is open during each gate cycle is proportional to the frequency of the unknown signal.

The accuracy of measurement obviously depends upon how far the unknown frequency is above the reference frequency. As it stands therefore, the instrument can only accurately measure frequencies that are substantially above 1 MHz. To enable the instrument to measure much lower frequencies, a series of decade frequency dividers are provided within it. These increase the time between the reference frequency pulses by factors of ten, and a typical instrument can have gate pulses separated in time by between 1 μs and 1 second.

Improvement in the accuracy of low-frequency measurement can be obtained by modifying the gating arrangements such that the signal of unknown frequency is made to control the opening and closing of the gate. The number of pulses at the reference frequency that pass through the gate during the open period is then a measure of the frequency of the unknown signal.

7.6.2 Phase-locked loop

A phase-locked loop is a circuit consisting of a phase-sensitive detector, a voltage controlled oscillator (VCO), and amplifiers, connected in a closed-loop system as shown in Figure 7.17. In a VCO, the oscillation frequency is proportional to the applied voltage. Operation of a phase-locked loop is as follows. The phase-sensitive

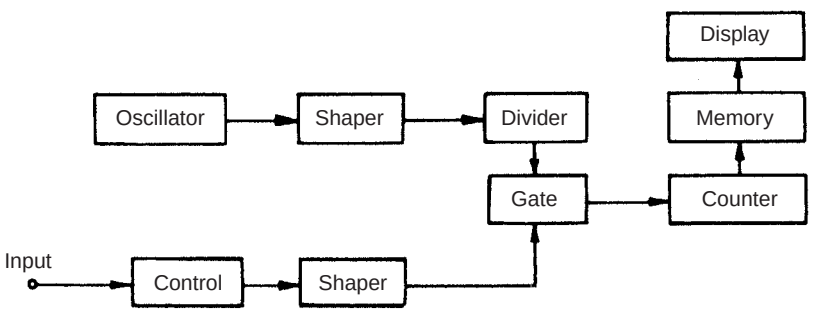

Fig. 7.16 Digital counter-timer system.

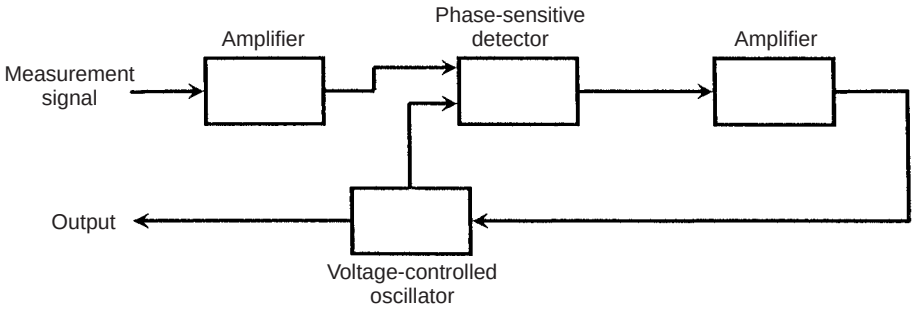

Fig. 7.17 Phase-locked loop.

detector compares the phase of the amplified input signal with the phase of the VCO output. Any phase difference generates an error signal, which is amplified and fed back to the VCO. This adjusts the frequency of the VCO until the error signal goes to zero, and thus the VCO becomes locked to the frequency of the input signal. The d.c. output from the VCO is then proportional to the input signal frequency.

7.6.3 Cathode ray oscilloscope

The cathode ray oscilloscope can be used in two ways to measure frequency. Firstly, the internal timebase can be adjusted until the distance between two successive cycles of the measured signal can be read against the calibrated graticule on the screen. Measurement accuracy by this method is limited, but can be optimized by measuring between points in the cycle where the slope of the waveform is steep, generally where it is crossing through from the negative to the positive part of the cycle. Calculation of the unknown frequency from this measured time interval is relatively simple. For example, suppose that the distance between two cycles is 2.5 divisions when the internal timebase is set at 10 ms/div. The cycle time is therefore 25 ms and hence the frequency is 1000/25, i.e. 40 Hz. Measurement accuracy is dependent upon how accurately the distance between two cycles is read, and it is very difficult to reduce the error level below ±5% of the reading.

The alternative way of using an oscilloscope to measure frequency is to generate *Lisajous patterns*. These are produced by applying a known reference-frequency sine wave to the y input (vertical deflection plates) of the oscilloscope and the unknown-frequency sinusoidal signal to the x input (horizontal deflection plates). A pattern is produced on the screen according to the frequency ratio between the two signals, and if the numerator and denominator in the ratio of the two signals both represent an integral number of cycles, the pattern is stationary. Examples of these patterns are shown in Figure 7.18, which also shows that phase difference between the waveforms has an effect on the shape. Frequency measurement proceeds by adjusting the reference frequency until a steady pattern is obtained on the screen and then calculating the unknown frequency according to the frequency ratio that the pattern obtained represents.

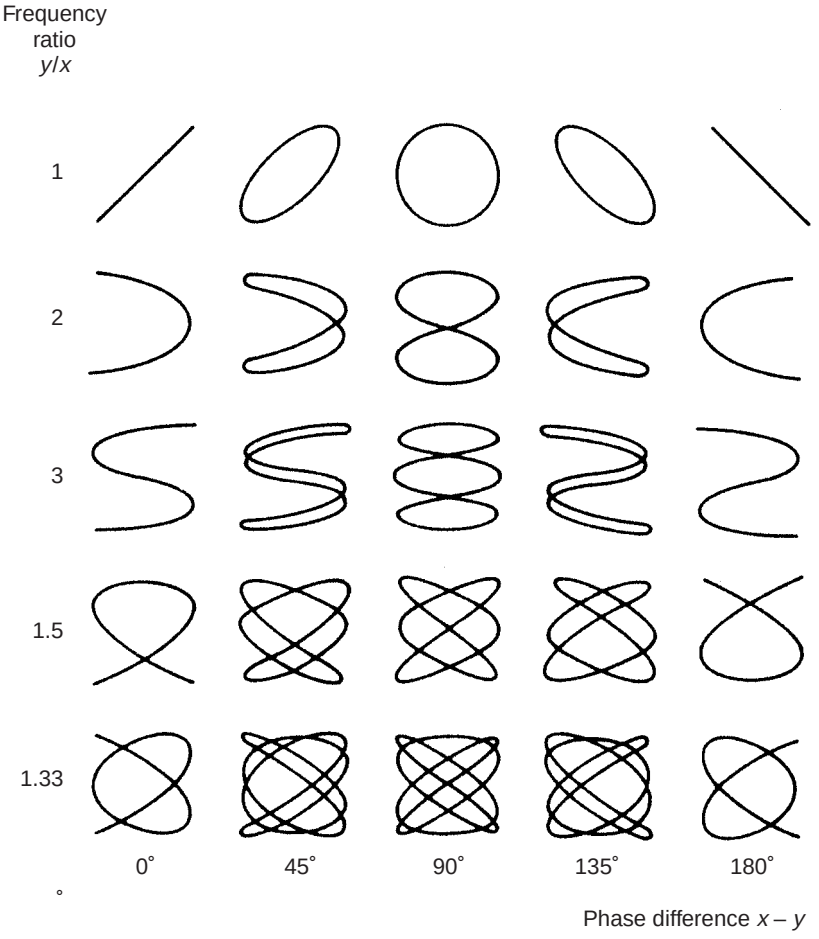

Fig. 7.18 Lisajous patterns.

7.6.4 The Wien bridge

The Wien bridge, shown in Figure 7.19, is a special form of a.c. bridge circuit that can be used to measure frequencies in the audio range. An alternative use of the instrument is as a source of audio frequency signals of accurately known frequency. A simple set of headphones is often used to detect the null-output balance condition. Other suitable instruments for this purpose are the oscilloscope and the electronic voltmeter. At balance, the unknown frequency is calculated according to:

$$f = \frac{1}{2\pi R_3 C_3}$$

The instrument is very accurate at audio frequencies, but at higher frequencies errors due to losses in the capacitors and stray capacitance effects become significant.

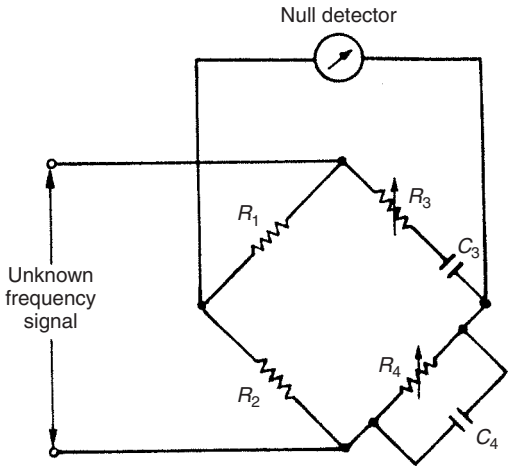

Fig. 7.19 Wien bridge.

7.7 Phase measurement

Instruments that convert the measured variable into a phase change in a sinusoidal electrical signal include the transit-time ultrasonic flowmeter, the radar level sensor, the LVDT and the resolver. The most accurate instrument for measuring the phase difference between two signals is the electronic counter-timer. However, two other methods also exist that are less accurate but are nevertheless very useful in some circumstances. One method involves plotting the signals on an X–Y plotter and the other uses a dual beam oscilloscope.

7.7.1 Electronic counter-timer

In principle, the phase difference between two sinusoidal signals can be determined by measuring the time that elapses between the two signals crossing the time axis. However, in practice, this is inaccurate because the zero crossings are susceptible to noise contamination. The normal solution to this problem is to amplify/attenuate the two signals so that they have the same amplitude and then measure the time that elapses between the two signals crossing some non-zero threshold value.

The basis of this method of phase measurement is a digital counter-timer with a quartz-controlled oscillator providing a frequency standard that is typically 10 MHz. The crossing points of the two signals through the reference threshold voltage level are applied to a gate that starts and then stops pulses from the oscillator into an electronic counter, as shown in Figure 7.20. The elapsed time, and hence phase difference, between the two input signals is then measured in terms of the counter display.

7.7.2 X–Y plotter

This is a useful technique for approximate phase measurement but is limited to low frequencies because of the very limited bandwidth of an X–Y plotter. If two input

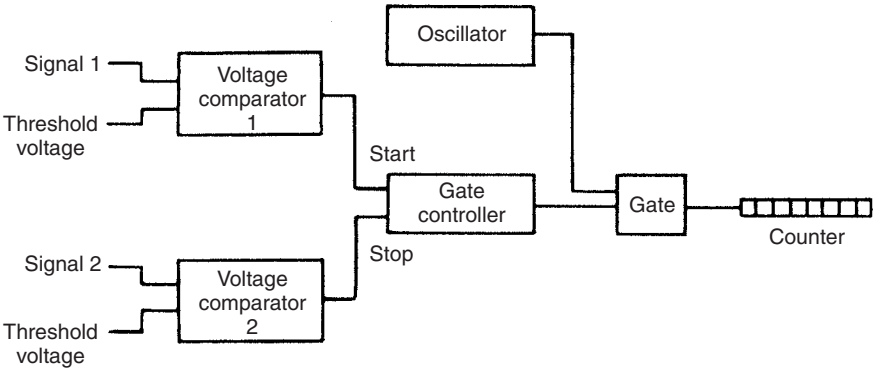

Fig. 7.20 Phase measurement with digital counter-timer.

signals of equal magnitude are applied to the X and Y inputs of a plotter, the plot obtained is an ellipse, as shown in Figure 7.21. If the X and Y inputs are given by:

$$V_X = V\sin(\omega t); \quad V_Y = V\sin(\omega t + \phi)$$

At $t = 0$, $V_X = 0$ and $V_Y = V\sin\phi$. Thus, from Figure 7.21, for $V_X = 0$, $V_Y = \pm h$:

$$\sin\phi = \pm h/V \tag{7.16}$$

Solution of equation (7.4) gives four possible values for ϕ but the ambiguity about which quadrant ϕ is in can usually be solved by observing the two signals plotted against time on a dual-beam oscilloscope.

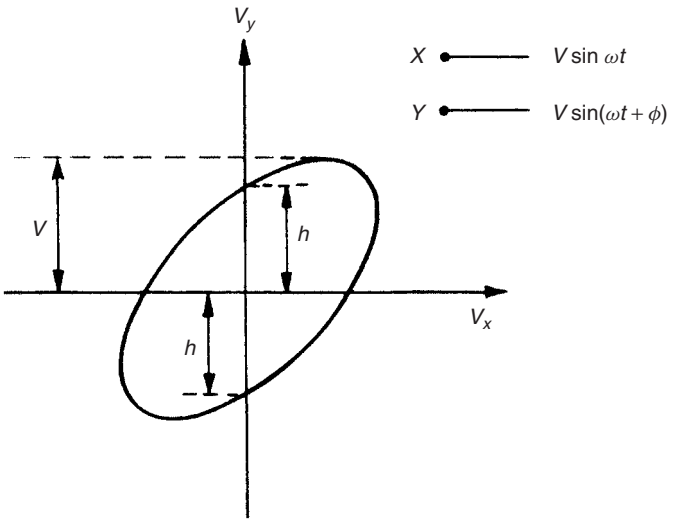

Fig. 7.21 Phase measurement using X–Y plotter.

7.7.3 Oscilloscope

Approximate measurement of the phase difference between signals can be made using a dual-beam oscilloscope. The two signals are applied to the two oscilloscope inputs and a suitable timebase chosen such that the time between the crossing points of the two signals can be measured. The phase difference of both low- and high-frequency signals can be measured by this method, the upper frequency limit measurable being dictated by the bandwidth of the oscilloscope (which is normally very high).

7.7.4 Phase-sensitive detector

The phase-sensitive detector described earlier in section 5.5.9 can be used to measure the phase difference between two signals that have an identical frequency. This can be exploited in measurement devices like the varying-phase output resolver (see Chapter 20).

7.8 Self-test questions

7.1 If the elements in the d.c. bridge circuit shown in Figure 7.2 have the following values: $R_u = 110\,\Omega$, $R_1 = 100\,\Omega$, $R_2 = 1000\,\Omega$, $R_3 = 1000\,\Omega$, $V_i = 10\,\text{V}$, calculate the output voltage V_0 if the impedance of the voltage-measuring instrument is assumed to be infinite.

7.2 Suppose that the resistive components in the d.c. bridge shown in Figure 7.2 have the following nominal values: $R_u = 3\,\text{k}\Omega$; $R_1 = 6\,\text{k}\Omega$; $R_2 = 8\,\text{k}\Omega$; $R_3 = 4\,\text{k}\Omega$. The actual value of each resistance is related to the nominal value according to $R_{\text{actual}} = R_{\text{nominal}} + \partial R$ where ∂R has the following values: $\partial R_u = 30\,\Omega$; $\partial R_1 = -20\,\Omega$; $\partial R_2 = 40\,\Omega$; $\partial R_3 = -50\,\Omega$. Calculate the open-circuit bridge output voltage if the bridge supply voltage V_i is 50 V.

7.3 (a) Suppose that the unknown resistance R_u in Figure 7.2 is a resistance thermometer whose resistance at 100°C is 500 Ω and whose resistance varies with temperature at the rate of 0.5 Ω/°C for small temperature changes around 100°C. Calculate the sensitivity of the total measurement system for small changes in temperature around 100°C, given the following resistance and voltage values measured at 15°C by instruments calibrated at 15°C : $R_1 = 500\,\Omega$; $R_2 = R_3 = 5000\,\Omega$; $V_i = 10$ V.

(b) If the resistance thermometer is measuring a fluid whose true temperature is 104°C, calculate the error in the indicated temperature if the ambient temperature around the bridge circuit is 20°C instead of the calibration temperature of 15°C, given the following additional information:

Voltage-measuring instrument zero drift coefficient = +1.3 mV/°C

Voltage-measuring instrument sensitivity drift coefficient = 0

Resistances R_1, R_2 and R_3 have a positive temperature coefficient of +0.2% of nominal value/°C

Voltage source V_i is unaffected by temperature changes.